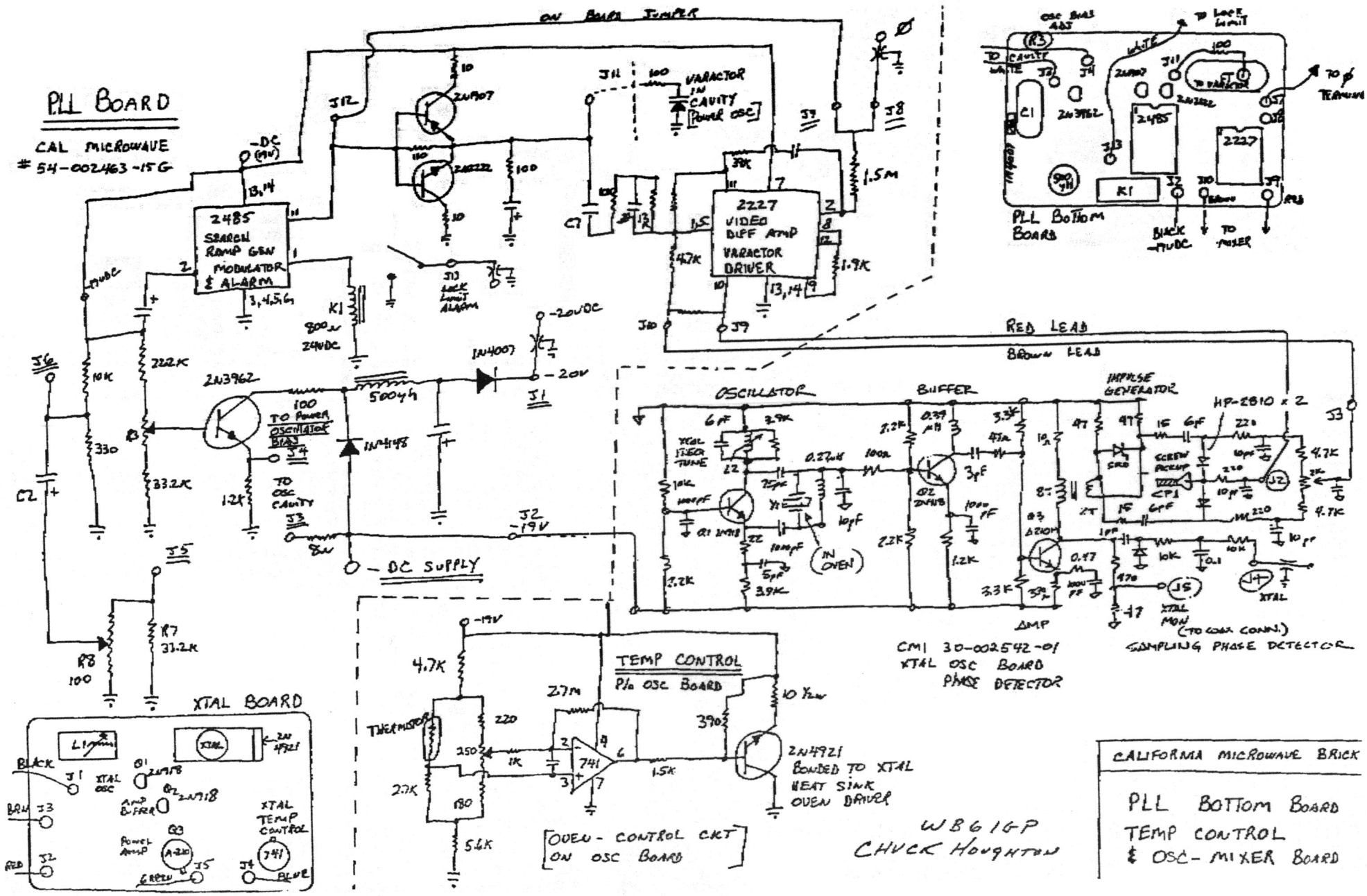
PLL BOARD
CAL MICROWAVE
54-002463-15G
ON BOARD JUMPER
2485
SEARCH RAMP GEN MODULATOR & ALARM
2227
VIDEO DIFF AMP VARACTOR DRIVER
VARACTOR IN CAVITY [POWER OSC]
LOCK LIMIT ALARM
2N3962
TO POWER OSCILLATOR BIAS
TO OSC CAVITY
1N4148
1N4007
-DC SUPPLY
RED LEAD
BROWN LEAD
OSCILLATOR
BUFFER
IMPULSE GENERATOR
HP-2810 x 2
XTAL TUNE
(IN OVEN)
AMP
XTAL MON (TO COAX CONN.)
SAMPLING PHASE DETECTOR
CM1 30-002542-01
XTAL OSC BOARD
PHASE DETECTOR
TEMP CONTROL
P/O OSC BOARD
THERMISTOR
2N4921
BONDED TO XTAL HEAT SINK OVEN DRIVER
[OVEN-CONTROL CKT ON OSC BOARD]
XTAL BOARD
XTAL OSC
AMP BUFFER
POWER AMP
XTAL TEMP CONTROL
BLACK
BRN
RED
GREEN
BLUE
PLL BOTTOM BOARD
TO LOCK LIMIT
TO CAVITY
TO VARACTOR
TO ϕ TERMINAL
BLACK -19VDC
TO MIXER
OSC BIAS ADJ
WB6IGP
CHUCK HOUGHTON
CALIFORNIA MICROWAVE BRICK
PLL BOTTOM BOARD
TEMP CONTROL
& OSC-MIXER BOARD